EPS PRE-BREAKER

MODEL PBX2

KEEP IT CLEAN!

The integral discharge and clean up blowers reduce installation time and aid in keeping your workplace clean. The dual blower design greatly reduces the chance of a material jam in the lower discharge bin. The clean up blower can be connected to the densifier via a 3" hose or used to vacuum up the work area, and the EPS fragments and dust are all returned to the bag hopper.

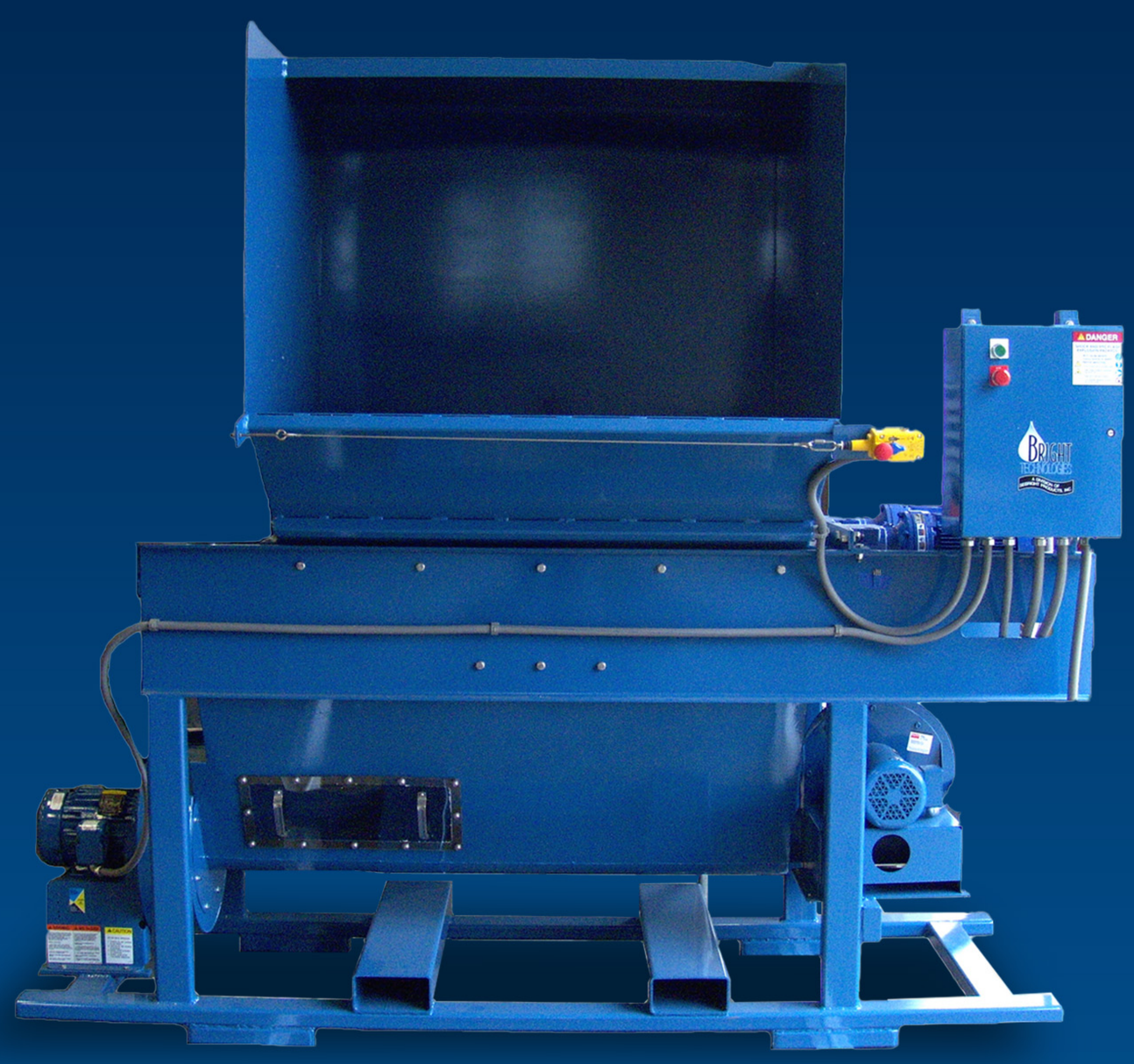

127 N. Water St. Hopkins, MI 49328
800-253-0532
www.sebrightproducts.com

SEBRIGHT PRODUCTS INC.

EPS PRE-BREAKER

THE PERFECT COMPANION TO OUR EPS DENSIFIERS

Features & Benefits

- Dual 5 HP direct drive gear motors
- Integral 7.5 HP material blowers
- Integral 3 HP cleanup blowers
- Unique spiral arbor design
- Heavy duty arbor bearings
- Low friction grate design
- Removable discharge bin window
- Accepts material up to 48" wide
- Hopper reduces airborne particles

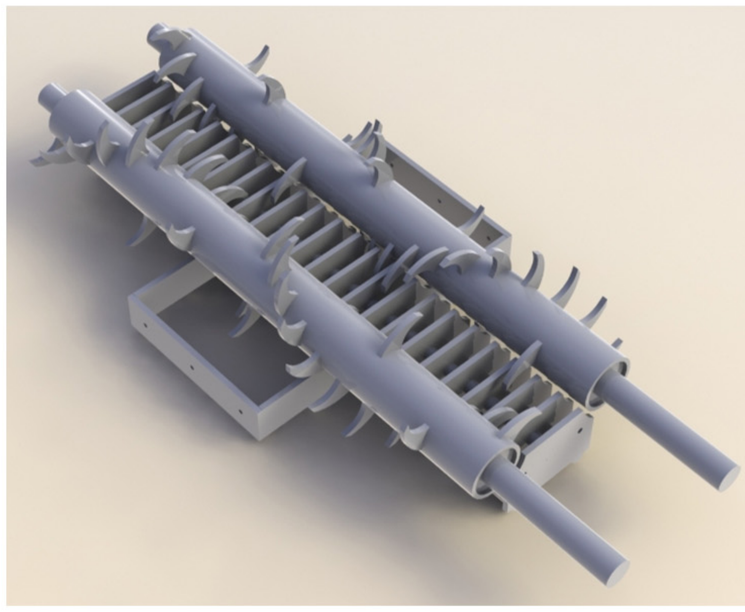

The PBX2 features dual 5 HP arbor drives. Each arbor has our exclusive "spiral tine" design that both lowers the required torque and aids in the processing of large EPS chunks without operator intervention.

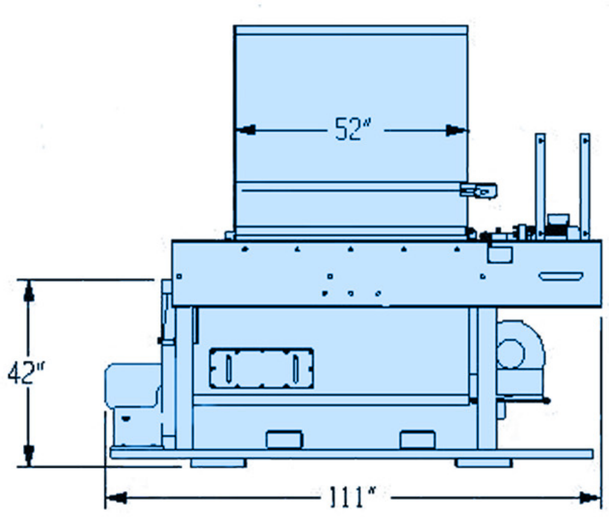

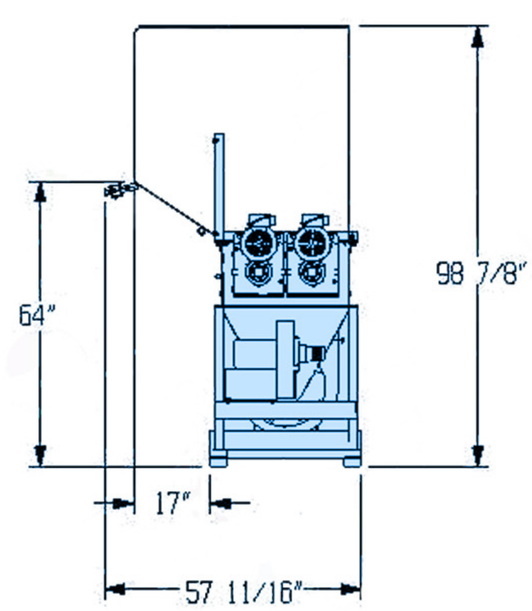

* All dimensional data for reference only

* Due to product improvement, the manufacturer reserves the right to alter, or amend, without notice, any of these specifications and dimensions.

Dimensional Data and Specifications

Model	THROUGHPUT CU. FT/ HR	DRIVE(S) 2 @ 5 HP	FAN 1 HP	FAN 2 HP	TOTAL HP	FEED OPENING	LOAD HEIGHT	WEIGHT
PBX2	2,000*	10	7.5	3	20.5	52"	64"	3,100 LBS

*Throughput varies with EPS size & properties

While Sebright Products, Inc., strives to make the information provided on processing of your waste or recycling stream, as timely and accurate as possible, the company makes no claims, promises or guarantees about the accuracy, completeness, or adequacy of any of the provided information, and expressly disclaims liability of errors and omissions in the content of the information, or analysis provided to your company. It is solely the responsibility of each recipient of the information Sebright Products, Inc., has provided to satisfy itself as to the accuracy of the information provided by Sebright Products, Inc., and as to the efficacy of the product(s) for the use(s) intended.